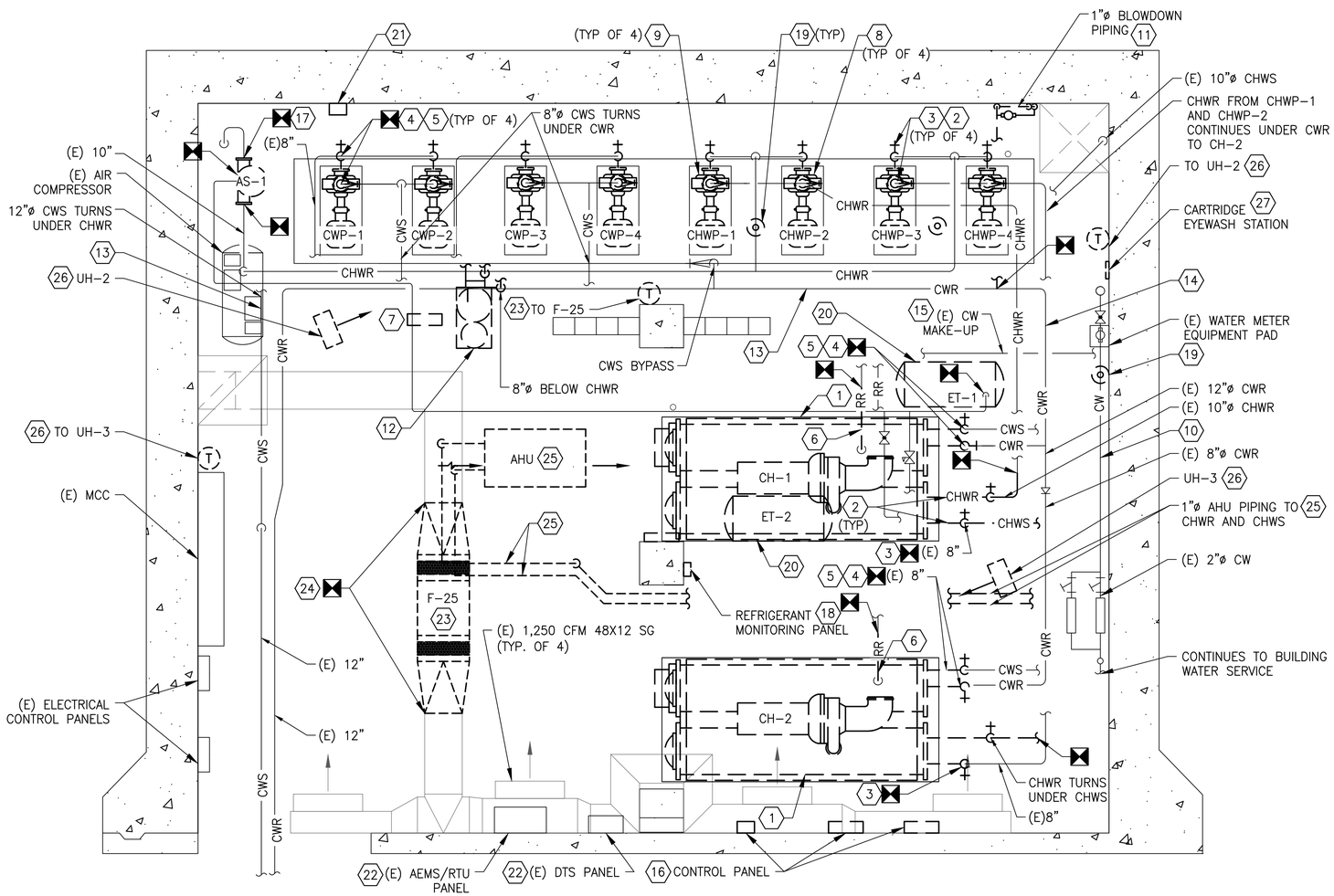

1 MECHANICAL PLAN - DEMOLITION
CWPD2-M-100

SCALE: 1/4" = 1'-0"

N

GENERAL NOTES:

A. CONTRACTOR SHALL FIELD VERIFY EXACT LOCATION AND QUANTITIES OF EQUIPMENT, PIPING, VALVES, DUCTWORK, ELECTRICAL AND CONTROL WIRING PRIOR TO DEMOLITION. ITEMS SHOWN ON THIS PLAN ARE APPROXIMATE.

B. REFER TO LEGEND SHEET FOR GENERAL ABBREVIATIONS AND SYMBOLS.

KEYNOTES:

1. REMOVE AND DISPOSE OF CHILLER, CHILLER SUPPORT, STARTER, WIRING, CONDUIT, JUNCTION AND PULL BOXES, DISCONNECT, AEMS SENSORS, AND CONTROLS. REMOVAL SHALL INCLUDE R-134a EVACUATION BY A CERTIFIED COMPANY. RECOVERED REFRIGERANT SHALL BE CLEANED AND THEN BE TURNED OVER TO WMATA PLANT MAINTENANCE IN 125 POUND BULLET CONTAINERS.
2. REMOVE AND DISPOSE OF CHILLED WATER PIPING (CHWS, CHWR), INSULATION, SUPPORT, TEMPERATURE AND PRESSURE GAUGES. EXTENT OF PIPING REMOVAL SHALL BE, IN GENERAL, TO THE INDICATED ISOLATION VALVE FLANGE FROM THE CHILLER. EXACT DEMOLITION POINT SHALL BE FIELD COORDINATED BY CONTRACTOR TO ACCOMMODATE NEW PIPING CONNECTIONS.
3. REMOVE AND DISPOSE OF CHILLED WATER PIPING VALVES AS IDENTIFIED TO BE DEMOLISHED. EXACT SIZE AND QUANTITY OF VALVES SHALL BE VERIFIED BY INSTALLING CONTRACTOR. EXTENT OF ALL VALVE REPLACEMENT SHALL BE INCLUSIVE OF THE CONNECTOR FLANGES.
4. REMOVE AND DISPOSE OF CONDENSER WATER PIPING (CWR, CWS), TEMPERATURE AND PRESSURE GAUGES. EXTENT OF PIPING REMOVAL SHALL BE, IN GENERAL, TO THE INDICATED ISOLATION VALVE FLANGE FROM THE CHILLER. EXACT DEMOLITION POINT SHALL BE FIELD COORDINATED BY CONTRACTOR TO ACCOMMODATE NEW PIPING CONNECTIONS.
5. REMOVE AND DISPOSE OF THE CONDENSER WATER PIPING VALVE. EXACT SIZE AND QUANTITY OF VALVES SHALL BE FIELD VERIFIED BY INSTALLING CONTRACTOR. EXTENT OF ALL VALVE REPLACEMENT SHALL BE INCLUSIVE OF THE CONNECTION FLANGES.
6. REMOVE EXISTING 2" REFRIGERANT RELIEF (VENT) PIPING TO EXTENT SHOWN.
7. EXISTING CHILLER PLANT CONTROL PANEL WITH HACH SC 200 CONTROLLER AND THE SUPPORT SKID SHALL REMAIN AND BE RE-USED.
8. REMOVE AND DISPOSE OF CHILLED WATER PUMPS, CHWP-1, CHWP-2, CHWP-3, AND CHWP-4. REMOVAL SHALL INCLUDE PUMP, MOTOR, POWER AND CONTROL WIRING, CONDUIT, JUNCTION AND PULL BOXES, PIPING, SUPPORT AND ISOLATION VALVES, SUCTION DIFFUSER AND ALL INSTRUMENTATION AND CONTROLS. EXISTING VIBRATION SUPPORT, INERTIAL PAD AND EQUIPMENT TO REMAIN AND BE RE-USED. EXTENT OF PIPING REMOVAL SHALL BE, IN GENERAL, TO THE INDICATED ISOLATION VALVE FLANGE FROM THE CHILLER. EXACT DEMOLITION POINT SHALL BE FIELD COORDINATED BY CONTRACTOR TO ACCOMMODATE NEW PIPING CONNECTIONS.
9. REMOVE AND DISPOSE OF CONDENSER WATER PUMPS, CWP-1, CWP-2, CWP-3, AND CWP-4. REMOVAL SHALL INCLUDE PUMP, MOTOR, POWER AND CONTROL WIRING, CONDUIT, JUNCTION AND PULL BOXES PIPING, SUPPORT, AND ISOLATION VALVES, SUCTION DIFFUSER AND ALL INSTRUMENT AND CONTROLS. EXISTING VIBRATION SUPPORT. INERTIAL PAD AND EQUIPMENT TO REMAIN AND BE RE-USED. EXTENT OF PIPING REMOVAL SHALL BE TO THE INDICATED ISOLATION VALVE FLANGE FROM THE CHILLER. EXACT DEMOLITION POINT SHALL BE FIELD COORDINATED BY CONTRACTOR TO ACCOMODATE NEW PIPING CONNECTIONS.
10. REMOVE AND DISPOSE OF ABANDONED CHEMICAL POT FEEDER, PIPING, SUPPORTS, AND ACCESSORIES THAT USED TO SERVE THE CONDENSER WATER SYSTEM.
11. REMOVE AND DISPOSE OF ABANDONED CONDENSER WATER BLOWDOWN PIPING, WATER METER, AND ACCESSORIES.
12. REMOVE AND DISPOSE OF EXISTING CONDENSER WATER TREATMENT (INCLUDING VALVES, PIPING, SUPPORTS, CHEMICAL DRUMS, METERING PUMPS, AND RELATED ELECTRICAL/CONTROL ACCESSORIES.
13. EXISTING 10" CHWR MAIN, CWS PIPING MAIN AND BRANCH TO CWP-1, CWP-2, CWP-3, AND CWP-4 RUNS BELOW CWR PIPING.
14. EXISTING 12" CWR, 10" CHWR TO CH-1, 10" CHWR TO CH-2, 10" CHWS, 8" CWS TO CH-1, 8" CWS TO CH-2 MAIN PIPING ARE STACKED AT THIS LOCATION. FIELD VERIFY EXACT LAYOUT AND ELEVATIONS.
15. REMOVE AND DISPOSE OF CW MAKE-UP PIPING BETWEEN MAIN AND EXPANSION TANK INCLUDING SUPPORTS.
16. REMOVE AND DISPOSE OF EXISTING ABANDONED JOHNSON CONTROL PANELS.
17. REMOVE AND DISPOSE OF EXISTING AIR SEPARATOR, AIR SEPARATOR SUPPORT SHALL REMAIN AND BE REUSED.
18. REMOVE AND DISPOSE OF EXISTING REFRIGERANT MONITORING SENSOR, INCLUDING ALL TUBING AND DEVICES.
19. REMOVE AND DISPOSE OF CONDENSER WATER AND CHILLED WATER SYSTEM CHEMICAL POT FEEDER.
20. REMOVE AND DISPOSE OF EXPANSION TANK, ASSOCIATED PIPING, AND VALVES.
21. REMOVE AND DISPOSE OF ABANDONED CONDUCTIVITY MONITOR CONTROLLER.
22. EXISTING DTS PANEL AND AEMS PANEL TO REMAIN.
23. REMOVE AND DISPOSE OF SUPPLY FAN F-25, INCLUDING FAN MOTOR, SUPPORTS, WIRING, CONTROL PANEL, ASSOCIATED THERMOSTAT, AND OTHER RELATED ACCESSORIES.
24. REMOVE AND DISPOSE OF DUCTWORK, INCLUDING DUCT FITTINGS, DUCT SUPPORTS, GRILLES AND SCREENS, DAMPERS, AND OTHER RELATED ACCESSORIES AS INDICATED.
25. REMOVE AND DISPOSE OF AIR HANDLING UNIT (AHU), INCLUDING UNIT MOTOR, SUPPORTS, WIRING, CONTROL PANEL, ASSOCIATED THERMOSTAT, AND OTHER RELATED ACCESSORIES. REMOVAL SHALL INCLUDE 3/4" CONDENSATE PIPING AND 1" CHWS AND 1" CHWR FROM AHU TO THE MAIN.
26. REMOVE AND DISPOSE OF UNIT HEATERS UH-2 AND UH-3, INCLUDING SUPPORTS, CONDUIT, JUNCTION AND PULL BOXES, WIRING, CONDUIT, JUNCTION AND PULL BOXES, AND ANY ASSOCIATED THERMOSTATS.
27. REMOVE AND DISPOSE OF CARTRIDGE EYEWASH STATION.

GFP A Gannett Fleming/Parsons JOINT VENTURE

DISTRICT OF COLUMBIA RICHARD A. SILVA 03/29/2018 No. 096926 MECHANICAL PROFESSIONAL ENGINEER

DESIGNED	B. VISWANATHAN	07/26/17 DATE
DRAWN	C. LOOSE	07/26/17 DATE
CHECKED	R. SILVA	DATE

REFERENCE DRAWINGS

NUMBER	TITLE

REVISIONS

DATE	NUM	DESCRIPTION
03/30/2018	0	FINAL CONTRACT DRAWINGS

WASHINGTON METROPOLITAN AREA TRANSIT AUTHORITY

DEPARTMENT OF DESIGN AND CONSTRUCTION SERVICES
OFFICE OF INFRASTRUCTURE RENEWAL PROGRAM GROUP

APPROVED Mark H. Magnussen 03/2018 DATE
MARK MAGNUSSEN
MANAGER, ENV. PLANNING AND COMP

APPROVED 03/2018 DATE
GRAHAM SPILLER
GFP DEPUTY PROGRAM MANAGER

REPLACEMENT OF CHILLERS
AND COOLING TOWER ACCESSORIES AT EIGHT METRO-RAIL STATIONS
CWPD2 - FEDERAL CENTER SW (D04)
MECHANICAL PLAN - DEMOLITION

M NO.	CONTRACT NO.	SCALE	DRAWING NO.	SHEET NO.
M1304	FQ-18102	1/4" = 1'-0"	CWPD2-M-100	74 of 173

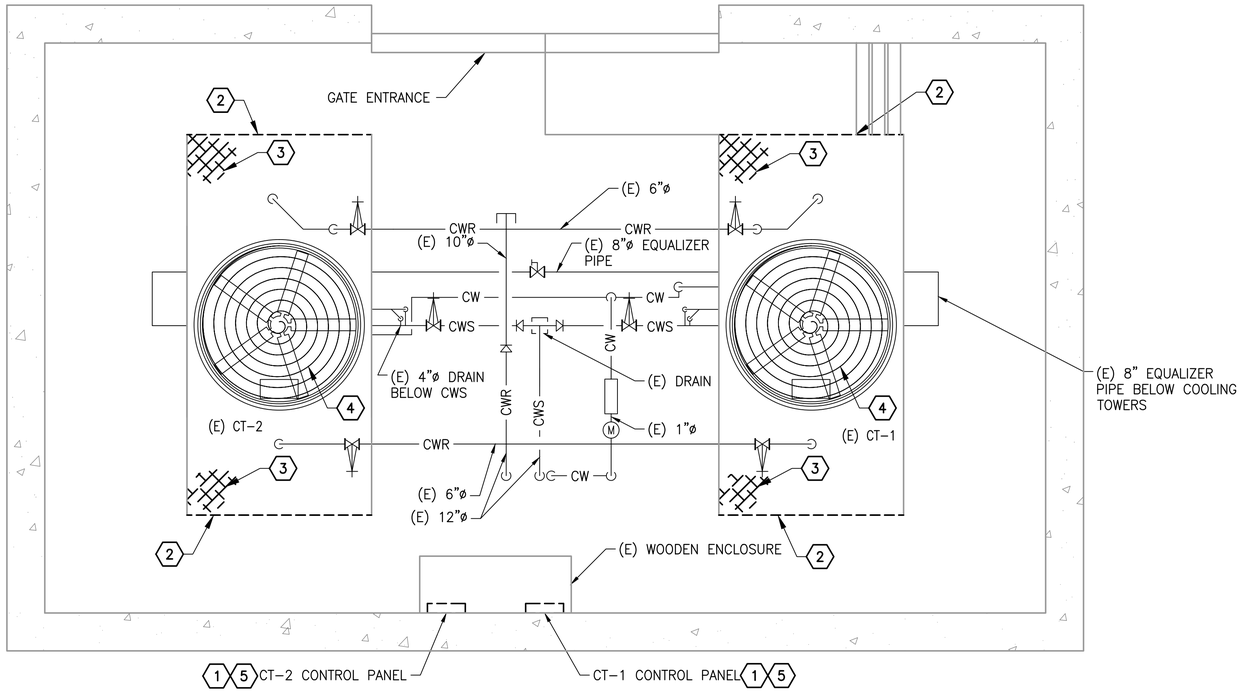

1 MECHANICAL PLAN - DEMOLITION
CWPD2-M-101

SCALE: 1/4" = 1'-0"

GENERAL NOTES:

A. CONTRACTOR SHALL FIELD VERIFY EXACT LOCATION AND QUANTITIES OF EQUIPMENT, PIPING, VALVES, DUCTWORK, ELECTRICAL AND CONTROL WIRING PRIOR TO DEMOLITION. ITEMS SHOWN ON THIS PLAN ARE APPROXIMATE.

B. REFER TO LEGEND SHEET FOR GENERAL ABBREVIATIONS AND SYMBOLS

C. ALL COOLING TOWER COMPONENTS THAT ARE REMOVED ARE TO BE REPLACED IN KIND. INSTALLING CONTRACTOR SHALL COORDINATE WITH COOLING TOWER MANUFACTURER PRIOR TO REMOVAL.

KEYNOTES:

1. REMOVE COOLING TOWER FAN STARTER, DISCONNECT, AND CONTROLLER.
2. REMOVE AND DISPOSE OF EXISTING LOUVER ON COOLING TOWER.
3. REMOVE AND DISPOSE OF EXISTING FILL, IN THE COOLING TOWER.
4. REMOVE EXISTING FAN MOTOR, BELT DRIVEN FAN DRIVE ASSEMBLY, BELTS, SHEAVES, AND MOUNTING HARDWARE.
5. REMOVE EXISTING VARIABLE FREQUENCY DRIVE, CONTROLLER AND ENCLOSURE.

N

GFP A Gannett Fleming/Parsons JOINT VENTURE

DISTRICT OF COLUMBIA RICHARD A. SILVA 03/29/2018 No. 096926 MECHANICAL PROFESSIONAL ENGINEER

DESIGNED	B. VISWANATHAN	07/26/17 DATE
DRAWN	C. LOOSE	07/26/17 DATE
CHECKED	R. SILVA	DATE

REFERENCE DRAWINGS

NUMBER	TITLE

REVISIONS

DATE	NUM	DESCRIPTION
03/30/2018	0	FINAL CONTRACT DRAWINGS

WASHINGTON METROPOLITAN AREA TRANSIT AUTHORITY

DEPARTMENT OF DESIGN AND CONSTRUCTION SERVICES
OFFICE OF INFRASTRUCTURE RENEWAL PROGRAM GROUP

APPROVED Mark H. Magnussen 03/2018
MARK MAGNUSSEN DATE
MANAGER, ENV. PLANNING AND COMP

APPROVED 03/2018
GRAHAM SPILLER DATE
GFP DEPUTY PROGRAM MANAGER

REPLACEMENT OF CHILLERS
AND COOLING TOWER ACCESSORIES AT EIGHT METRO-RAIL STATIONS
CWPD2 - FEDERAL CENTER SW (D04)
MECHANICAL PLAN - DEMOLITION

M NO.	CONTRACT NO.	SCALE	DRAWING NO.	SHEET NO.
M1304	FQ-18102	1/4" = 1'-0"	CWPD2-M-101	75 of 173

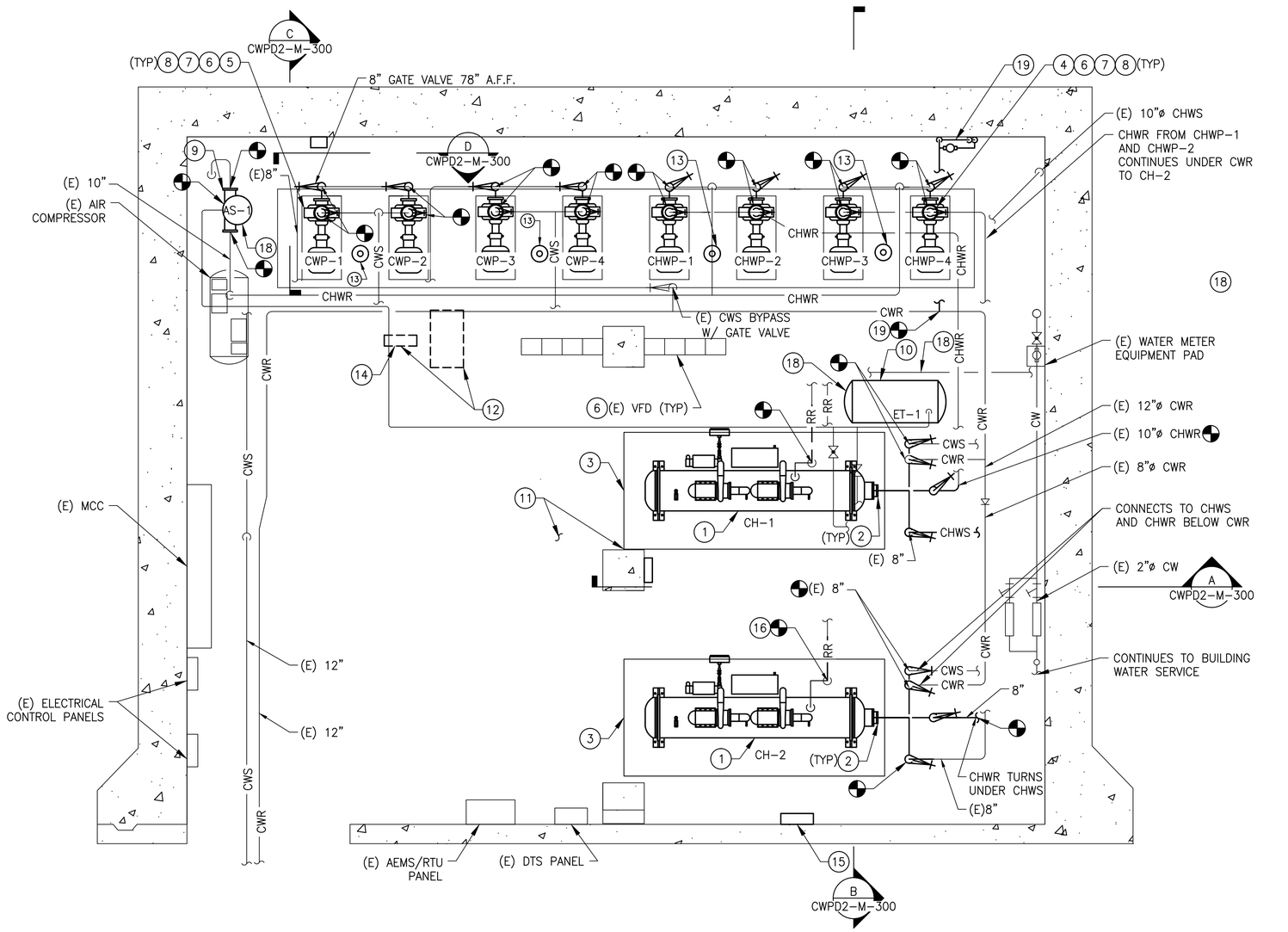

1 MECHANICAL PLAN - NEW WORK
CWPD2-M-102

SCALE: 1/4" = 1'-0"

N

GENERAL NOTES:

A. CONTRACTOR SHALL FIELD VERIFY AND COORDINATE LOCATION OF NEW EQUIPMENT, PIPING, VALVES, DUCTWORK, ELECTRICAL AND CONTROL WIRING WITH EXISTING PRIOR TO INSTALLATION. ITEMS SHOWN ON THIS PLAN ARE APPROXIMATE.

B. REFER TO LEGEND SHEET FOR GENERAL ABBREVIATIONS AND SYMBOLS.

C. REFER TO CHILLER PIPING SCHEMATIC FOR ALL VALVES. ALL VALVES MAY NOT BE SHOWN ON THIS DRAWING FOR CLARITY.

D. INSTALL ALL EQUIPMENT AND COMPONENTS PER MANUFACTURERS RECOMMENDATION.

KEYNOTES:

1. PROVIDE AND INSTALL CHILLER, CORRESPONDING VIBRATION ISOLATION, ANCHOR AND SUPPORT.
2. PROVIDE AND INSTALL ALL PIPING, FITTINGS, VALVES, PIPING INSULATION AND INSTRUMENTATION FOR CONNECTION TO CHILLER. PROVIDE A VICTAULIC COUPLING CONNECTION PIECE AT EACH PIPE CONNECTION TO CHILLER FOR EASE OF MAINTENANCE.
3. REUSE EXISTING EQUIPMENT PAD. REPAIR AND MODIFY AS REQUIRED TO FIT NEW INSTALLATION.
4. PROVIDE AND INSTALL CHILLED WATER PUMPS, CHWP-1, CHWP-2, CHWP-3, AND CHWP-4. INSTALLATION SHALL INCLUDE PUMP, INVERTER DUTY RATED MOTOR FOR VFD APPLICATION, VIBRATION SUPPORT, IMMEDIATE PIPING, ISOLATION VALVES, TRIPLE DUTY VALVES, FLEXIBLE CONNECTORS, SUCTION GUIDE WITH INTEGRAL STRAINER, ECCENTRIC REDUCER, AND CORRESPONDING INSTRUMENTATION & CONTROLS.
5. PROVIDE AND INSTALL CONDENSER WATER PUMPS, CWP-1, CWP-2, CWP-3 AND CWP-4. INSTALLATION SHALL INCLUDE PUMP, INVERTER DUTY RATED MOTOR FOR VFD APPLICATION, VIBRATION SUPPORT, IMMEDIATE PIPING, FLEXIBLE CONNECTORS, SUCTION GUIDE WITH INTEGRAL STRAINER, ECCENTRIC REDUCER, ISOLATION VALVES, TRIPLE DUTY VALVES, AND CORRESPONDING INSTRUMENTATION & CONTROLS. INSULATE PUMPS AND PIPING.
6. INTEGRATE EXISTING PUMP VFD DRIVES WITH CHILLER CONTROL PANEL.
7. REUSE EXISTING EQUIPMENT PAD, SPRING ISOLATOR AND INERTIA PAD. REPAIR AND MODIFY AS REQUIRED TO FIT NEW INSTALLATION.
8. PROVIDE AND INSTALL ALL APPROPRIATE PIPE FITTINGS FOR CONNECTION TO PUMPS.
9. PROVIDE AND INSTALL AIR SEPARATOR, CORRESPONDING PIPING AND SUPPORTS. INSULATE AIR SEPARATOR AND PIPING.
10. PROVIDE AND INSTALL EXPANSION TANK AND CORRESPONDING PIPING. REUSE EXISTING CEILING MOUNTED SUPPORT.
11. CONTRACTOR SHALL PAINT CHILLER PLANT FLOORS AND EQUIPMENT PADS WITH BATTLE SHIP GREY OR EQUAL. THE SAFETY LINES AND TRIPPING HAZARD SHALL BE PAINTED YELLOW OR RED.
12. A. COORDINATE WITH OTHER WMATA CONTRACT INSTALLING WATER TREATMENT SYSTEM.
    B. PROVIDE AND INSTALL A NEW WMATA CHILLED WATER SYSTEM LOOP. THE LOOP SHALL INCLUDE PIPING, VALVES, HACH INDUCTIVE CONDUCTIVITY SENSOR – 3725E2T, FLOW SWITCH GEM SENSORS FS-500 170231, AND CONVERTIBLE DIGITAL pH SENSOR HACH DPC1R2A. REFER TO REFERENCE DRAWING DD-ME-HVAC-007.
    C. PROVIDE AND INSTALL A NEW WMATA CONDENSER WATER SYSTEM LOOP. THE LOOP SHALL INCLUDE PIPING, VALVES, HACH INDICTIVE CONDUCTIVITY SENSOR – 3725E2T, FLOW SWITCH GEM SENSORS FS-500 170231. REFER TO REFERENCE DRAWING DD-ME-HVAC-008.
13. PROVIDE AND INSTALL CHEMICAL POT FEEDER FOR CONDENSER WATER AND CHILLED WATER SYSTEM. CHEMICAL POT FEEDER SHALL BE NEPTUNE VTF-5HF.
14. PROVIDE AND INSTALL ONE CHILLER PLANT CONTROL PANEL (CPCP). REFER TO REFERENCE DRAWING DD-ME-HVAC-009 FOR CPCP DETAILS. PANEL SHALL BE INSTALLED 48" ABOVE FINISHED FLOOR.
15. PROVIDE AND INSTALL CHILLED WATER AND CONDENSER WATER FLOW MONITORING SYSTEM. PROVIDE AND INSTALL COMMUNICATIONS WIRING IN RIGID CONDUIT FROM FLOW MONITORING PANEL TO CHILLER PLANT CONTROL PANEL, UTILIZING BELDEN 89842 MULTI-CONDUCTOR; LOW CAPACITANCE TO COMPUTER POINT OF SERVICE (POS) CABLE OR EQUIVALENT. INSTALL 48" ABOVE FINISHED FLOOR. FLOW METER SHALL BE INSTALLED IN ACCORDANCE WITH MANUFACTURER'S RECOMMENDED INSTALLATION PROCEDURES. FLOW METERS AND SENSOR CABLES SHOULD NOT BE INSTALLED WITHIN EIGHT FEET OF VFDs OR FLORESCENT LIGHT FIXTURES.
16. PROVIDE AND INSTALL REFRIGERANT VENT/ RELIEF PIPING FROM CHILLER (AS PER CHILLER MANUFACTURER). FIELD VERIFY AND CONNECT NEW 2" REFRIGERANT RELIEF PIPING FROM CHILLER TO EXISTING REFRIGERANT RELIEF MAIN.
17. PROVIDE ACCESS CLEARANCE AT ALL LOCATION OF VALVES, STRAINER, INSTRUMENTATION AND EQUIPMENT AS REQUIRED BY MANUFACTURER AND FOR EASE OF MAINTENANCE.
18. PROVIDE PIPING CONNECTION BETWEEN EXPANSION TANK AND CW MAKE-UP MAIN. REFER TO SCHEMATIC FOR CONNECTION DETAILS.
19. PROVIDE CWS BLOWDOWN PIPING AND METER. PIPING SHALL TERMINATE AT NEAREST FLOOR DRAIN.

GFP A Gannett Fleming/Parsons JOINT VENTURE

DISTRICT OF COLUMBIA RICHARD A. SILVA 03/29/2018 No. 096926 MECHANICAL PROFESSIONAL ENGINEER

DESIGNED	C. LOOSE	07/26/17 DATE
DRAWN	C. LOOSE	07/26/17 DATE
CHECKED	R. SILVA	DATE

REFERENCE DRAWINGS

NUMBER	TITLE

REVISIONS

DATE	NUM	DESCRIPTION
03/30/2018	0	FINAL CONTRACT DRAWINGS

WASHINGTON METROPOLITAN AREA TRANSIT AUTHORITY

DEPARTMENT OF DESIGN AND CONSTRUCTION SERVICES
OFFICE OF INFRASTRUCTURE RENEWAL PROGRAM GROUP

APPROVED Mark H. Magnussen 03/2018 DATE
MARK MAGNUSSEN
MANAGER, ENV. PLANNING AND COMP

APPROVED 03/2018 DATE
GRAHAM SPILLER
GFP DEPUTY PROGRAM MANAGER

REPLACEMENT OF CHILLERS
AND COOLING TOWER ACCESSORIES AT EIGHT METRO-RAIL STATIONS
CWPD2 - FEDERAL CENTER SW (D04)
MECHANICAL PLAN - NEW WORK

M NO.	CONTRACT NO.	SCALE	DRAWING NO.	SHEET NO.
M1304	FQ-18102	1/4" = 1'-0"	CWPD2-M-102	76 of 173

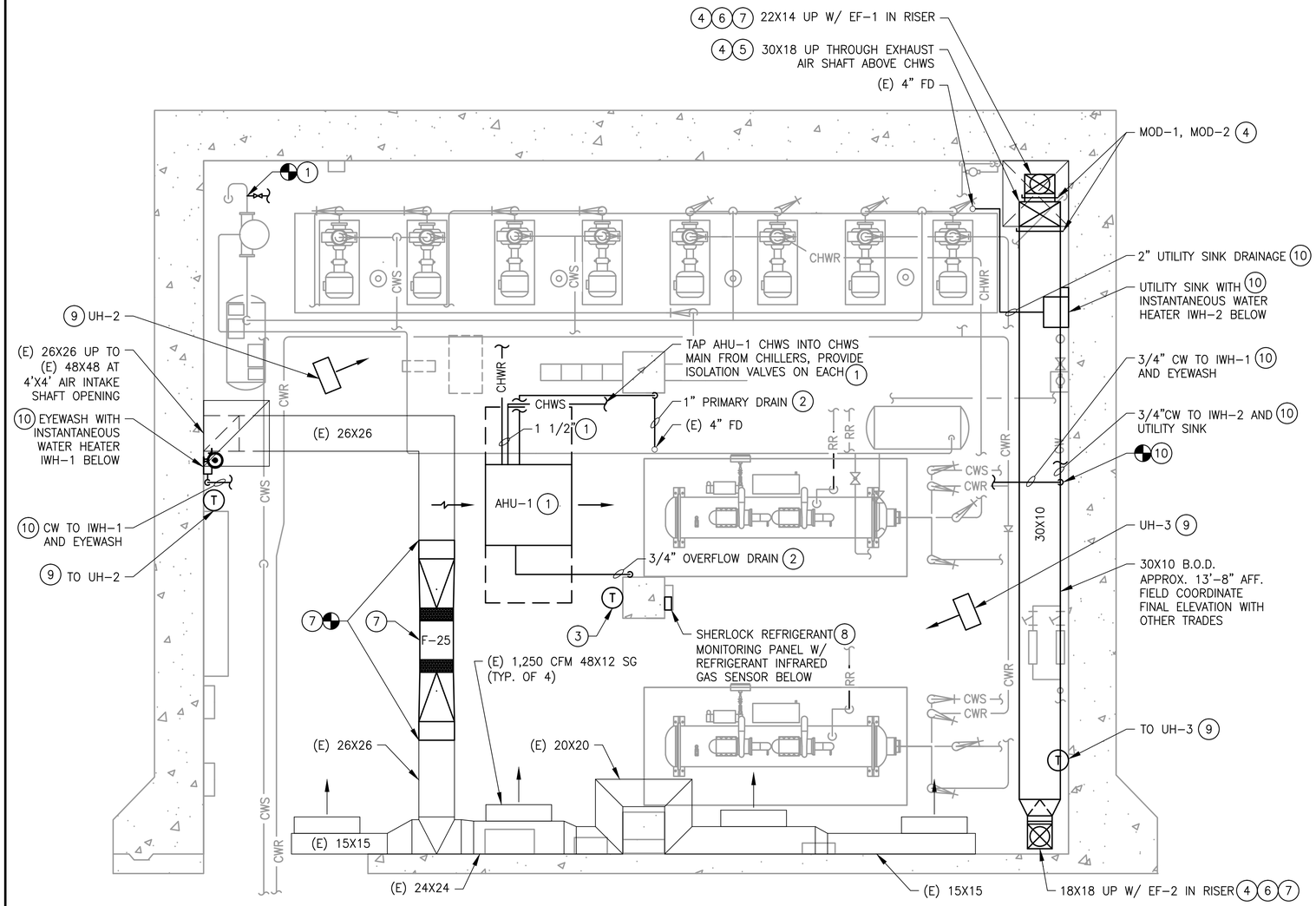

1 MECHANICAL PLAN - NEW WORK

CWPD2-M-103

SCALE: 1/4" = 1'-0"

GENERAL NOTES:

A. CONTRACTOR SHALL FIELD VERIFY AND COORDINATE LOCATION OF NEW EQUIPMENT, PIPING, VALVES, DUCTWORK, ELECTRICAL AND CONTROL WIRING WITH EXISTING PRIOR TO INSTALLATION. ITEMS SHOWN ON THIS PLAN ARE APPROXIMATE.

B. REFER TO LEGEND SHEET FOR GENERAL ABBREVIATIONS AND SYMBOLS.

C. REFER TO CHILLER PIPING SCHEMATIC FOR ALL VALVES. ALL VALVES MAY NOT BE SHOWN ON THIS DRAWING FOR CLARITY.

D. INSTALL ALL EQUIPMENT AND COMPONENTS PER MANUFACTURERS RECOMMENDATION.

KEYNOTES:

1. PROVIDE AND INSTALL NEW THERMOSTATICALLY CONTROLLED AIR HANDLING UNIT (AHU-1) INCLUDING PIPING, VALVES, WIRING, CONDUIT, AND SUPPORTS. CHWS TO THE UNIT SHALL BE TAPPED FROM THE CHWS MAIN AS INDICATED; CHWR SHALL BE TAPPED INTO THE CHWR MAIN AS INDICATED. CHWS AND CHWR PIPING SHALL BE FIELD ROUTED. UNIT SHALL BE MOUNTED AT A MINIMUM 7'-0" AFF. FIELD COORDINATE FINAL MOUNTING ELEVATION WITH OTHER TRADES.

2. PRIMARY CONDENSATE DRAINAGE FROM AHU-1 SHALL BE FIELD ROUTED DOWN TO AND ALONG FLOOR SLAB TO A NEARBY FLOOR DRAIN AS SHOWN. OVERFLOW CONDENSATE DRAINAGE FROM AHU-1 SHALL BE FIELD ROUTED TO DISCHARGE AT VISIBLE LOCATION AS INDICATED. DRAINAGE RISERS DOWN TO FLOOR SHALL BE MOUNTED FLUSH WITH STRUCTURAL COLUMN(S). PROVIDE PIPING ALONG FLOOR SLAB WITH NON-SLIP PIPE COVER WHERE THERE IS A TRIP HAZARD.

3. PROVIDE AND INSTALL NEW SPACE THERMOSTAT AND INTEGRATE WITH NEW AHU-1, F-25, EF-1, AND EF-2.

4. PROVIDE AND INSTALL NEW EXHAUST DUCTWORK, INCLUDING ALL NECESSARY FITTINGS, SUPPORTS, AND DAMPERS. CONTRACTOR SHALL FIELD COORDINATE THE HEIGHT OF DUCTWORK ABOVE FLOOR TO AVOID ANY INTERFERENCE WITH OTHER PIPING, EQUIPMENT, SUPPORTS, CONDUIT, AND LIGHTING.

5. NEW EXHAUST DUCT SHALL BE FIELD ROUTED TO TERMINATE IN FIRST HORIZONTAL OF EXHAUST AIR SHAFT. PROVIDE WITH GRAVITY DAMPER AND BLANK OFF PANEL COVERING REMAINING AREA OF SHAFT TO PREVENT RE-ENTRY OF EXHAUST AIR INTO CHILLER PLANT. FIELD COORDINATE WITH REFRIGERANT RELIEF PIPING IN SHAFT.

6. TERMINATE EXHAUST DUCT WITH A WIRE MESH SCREEN AT A 45° ANGLE AND AT 18" ABOVE FINISHED FLOOR. WIRE MESH SCREEN SHALL BE 1/4"x1/4".

7. PROVIDE AND INSTALL NEW EXHAUST FANS (EF-1, EF-2) AND NEW SUPPLY FAN (F-25) INCLUDING WIRING, CONDUIT, AND SUPPORTS. CONTRACTOR SHALL UTILIZE FLEXIBLE CONNECTIONS AND TRANSITION AS REQUIRED AT FAN INLETS AND OUTLETS FOR CONNECTION TO NEW DUCTWORK. PROVIDE SUPPORTS WITH SPRING VIBRATION ISOLATORS. EXHAUST FANS SHALL BE SIZED TO MEET THE REQUIREMENTS OF ASHRAE 15. FIELD COORDINATE F-25 MOUNTING ELEVATION WITH EXISTING DUCTWORK ELEVATION.

8. PROVIDE AND INSTALL NEW REFRIGERANT LEAK MONITORING AND CONTROL SYSTEM, INCLUDING REFRIGERANT INFRARED GAS SENSOR, STROBE LIGHTS, ALARM, AND WIRING. INTEGRATE WITH NEW EXHAUST FANS AND CHILLER PLANT MONITORING PANEL. REFRIGERANT DETECTION SYSTEM SHALL UTILIZE SHERLOCK 402-4 CONTROL MODULE AND ONE SHERLOCK REFRIGERANT INFRARED GAS SENSOR FOR R134A. CONTRACTOR SHALL FIELD VERIFY AND INSTALL REFRIGERANT INFRARED GAS SENSOR 18" ABOVE FINISHED FLOOR LEVEL. REFER TO EXHAUST FAN SEQUENCE OF OPERATION ON DRAWING CWPA1-M-610.

9. PROVIDE AND INSTALL NEW UNIT HEATER INCLUDING WIRING, CONDUIT, SUPPORTS, AND WALL-MOUNTED THERMOSTAT.

10. PROVIDE AND INSTALL NEW EYEWASH, UTILITY SINK, FAUCET, AND INSTANTANEOUS WATER HEATER, INCLUDING PIPING, WIRING, CONDUIT, AND SUPPORTS. WATER SUPPLY SHALL BE FIELD ROUTED TO CONNECT UPSTREAM OF THE EXISTING MAKE-UP WATER BACKFLOW PREVENTERS. PROVIDE INLINE ISOLATION VALVE, STRAINER, AND REDUCED PRESSURE TYPE BACKFLOW PREVENTER AT AN ACCESSIBLE LOCATION. FIELD ROUTE UTILITY SINK DRAINAGE PIPING ALONG FLOOR SLAB TO NEARBY FLOOR DRAIN. PROVIDE PIPING ALONG FLOOR SLAB WITH NON-SLIP PIPE COVER WHERE THERE IS A TRIP HAZARD. EYEWASH DRAINAGE SHALL BE STRAIGHT TO FLOOR. REFER TO DETAIL 1 ON DRAWING M-502.

GFP A Gannett Fleming/Parsons JOINT VENTURE

DISTRICT OF COLUMBIA RICHARD A. SILVA 03/29/2018 No. 096926 MECHANICAL PROFESSIONAL ENGINEER

DESIGNED	M. OLAYA	07/26/17 DATE
DRAWN	M. OLAYA	07/26/17 DATE
CHECKED	R. SILVA	03/23/18 DATE

REFERENCE DRAWINGS

NUMBER	TITLE

REVISIONS

DATE	NUM	DESCRIPTION
03/30/2018	0	FINAL CONTRACT DRAWINGS

WASHINGTON METROPOLITAN AREA TRANSIT AUTHORITY

DEPARTMENT OF DESIGN AND CONSTRUCTION SERVICES
OFFICE OF INFRASTRUCTURE RENEWAL PROGRAM GROUP

APPROVED Mark H. Magnussen 03/2018 DATE
MARK MAGNUSSEN
MANAGER, ENV. PLANNING AND COMP

APPROVED 03/2018 DATE
GRAHAM SPILLER
GFP DEPUTY PROGRAM MANAGER

REPLACEMENT OF CHILLERS
AND COOLING TOWER ACCESSORIES AT EIGHT METRO-RAIL STATIONS
CWPD2 - FEDERAL CENTER SW (D04)
MECHANICAL PLAN - NEW WORK

M NO.	CONTRACT NO.	SCALE	DRAWING NO.	SHEET NO.
M1304	FQ-18102	1/4" = 1'-0"	CWPD2-M-103	77 of 173

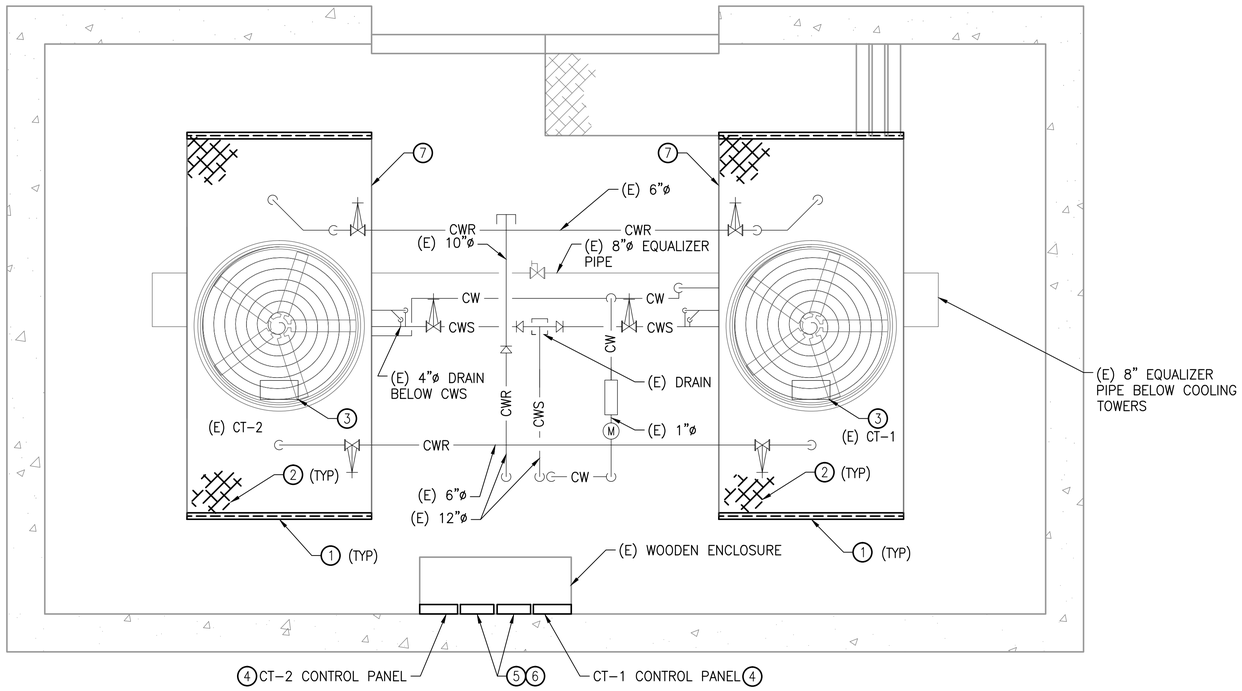

1 MECHANICAL PLAN - NEW WORK
CWPD2-M-104

SCALE: 1/4" = 1'-0"

GENERAL NOTES:

A. CONTRACTOR SHALL FIELD VERIFY EXACT LOCATION AND QUANTITIES OF EQUIPMENT, PIPING, VALVES, DUCTWORK, ELECTRICAL AND CONTROL WIRING PRIOR TO DEMOLITION. ITEMS SHOWN ON THIS PLAN ARE APPROXIMATE.

B. REFER TO LEGEND SHEET FOR GENERAL ABBREVIATIONS AND SYMBOLS

C. COOLING TOWERS LOCATED OUTSIDE THE CHILLER PLANT, ON GRADE NEXT TO THE PARKING LOT.

KEYNOTES:

1. PROVIDE AND INSTALL NEW LOUVER GRILLES ON COOLING TOWER. COORDINATE WITH COOLING TOWER MANUFACTURER FOR EXACT PART. THE LOUVER DIMENSION SHALL MATCH EXISTING.
2. PROVIDE AND INSTALL NEW PLASTIC FILL IN THE COOLING TOWER. COORDINATE WITH COOLING TOWER MANUFACTURER FOR EXACT PART. THE NEW FILL DIMENSION AND TYPE SHALL MATCH EXISTING.
3. PROVIDE AND INSTALL NEW DIRECT DRIVE FAN MOTOR, DRIVE ASSEMBLY, AND MOUNTING HARDWARE. FAN MOTOR SHALL BE INVERTER DUTY RATED. COORDINATE WITH COOLING TOWER MANUFACTURER FOR EXACT PARTS.
4. PROVIDE AND INSTALL NEW DISCONNECT AND CONTROLS.
5. PROVIDE AND INSTALL NEW VARIABLE FREQUENCY DRIVE CONTROLLER FOR COOLING TOWER FAN. VFD SHALL BE LOCATED AT GRADE IN THE SAME LOCATION AS EXISTING, AND INSIDE A NEMA 4X ENCLOSURE.
6. COOLING TOWER FAN MODULATION SHALL BE INTEGRATED BY LOCALLY INSTALLED COOLING TOWER CONTROL PANEL.
7. PROVIDE NEW SUMP PUMP. FIELD COORDINATE EXACT LOCATION OF SUMP PUMP.

N

GFP A Gannett Fleming/Parsons JOINT VENTURE

DISTRICT OF COLUMBIA RICHARD A. SILVA 03/29/2018 No. 096926 MECHANICAL PROFESSIONAL ENGINEER

DESIGNED	C. LOOSE	07/26/17 DATE
DRAWN	C. LOOSE	07/26/17 DATE
CHECKED	R. SILVA	DATE

REFERENCE DRAWINGS

NUMBER	TITLE

REVISIONS

DATE	NUM	DESCRIPTION
03/30/2018	0	FINAL CONTRACT DRAWINGS

WASHINGTON METROPOLITAN AREA TRANSIT AUTHORITY

DEPARTMENT OF DESIGN AND CONSTRUCTION SERVICES
OFFICE OF INFRASTRUCTURE RENEWAL PROGRAM GROUP

APPROVED Mark H. Magnussen 03/2018 DATE
MARK MAGNUSSEN
MANAGER, ENV. PLANNING AND COMP

APPROVED 03/2018 DATE
GRAHAM SPILLER
GFP DEPUTY PROGRAM MANAGER

REPLACEMENT OF CHILLERS
AND COOLING TOWER ACCESSORIES AT EIGHT METRO-RAIL STATIONS
CWPD2 - FEDERAL CENTER SW (D04)
MECHANICAL PLAN - NEW WORK

M NO.	CONTRACT NO.	SCALE	DRAWING NO.	SHEET NO.
M1304	FQ-18102	1/4" = 1'-0"	CWPD2-M-104	78 of 173

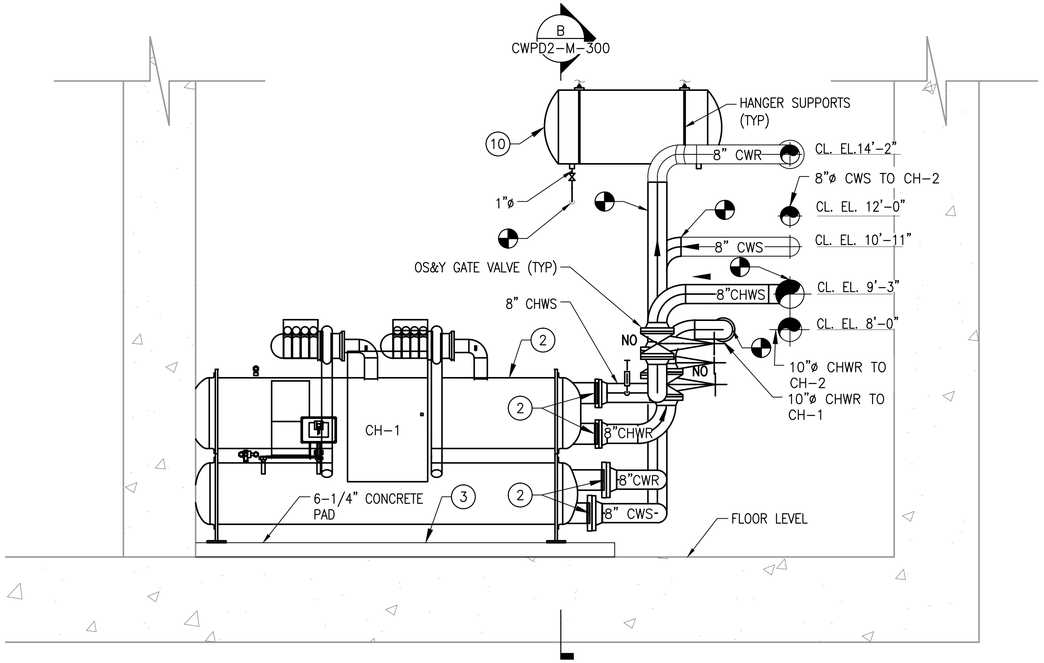

A SECTION - MECHANICAL
CWPD2-M-300
SCALE: 3/8" = 1'-0"

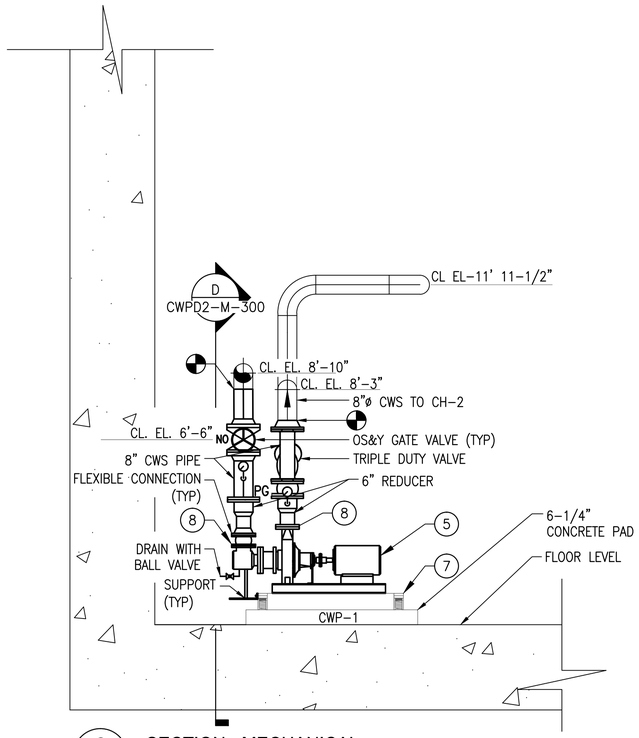

C SECTION - MECHANICAL
CWPD2-M-300
SCALE: 3/8" = 1'-0"

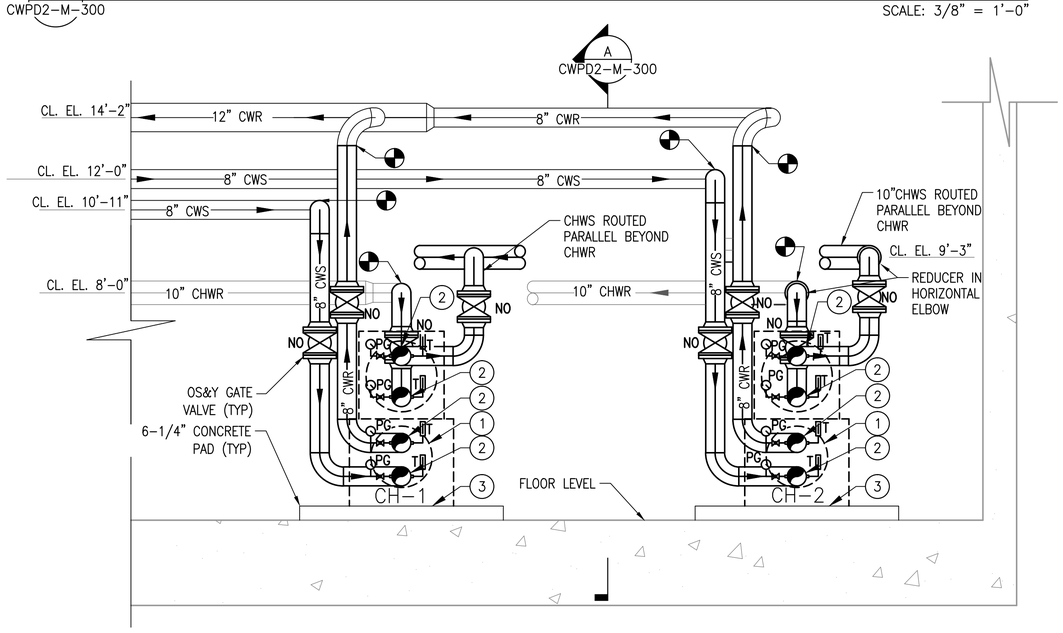

B SECTION - MECHANICAL
CWPD2-M-300
SCALE: 3/8" = 1'-0"

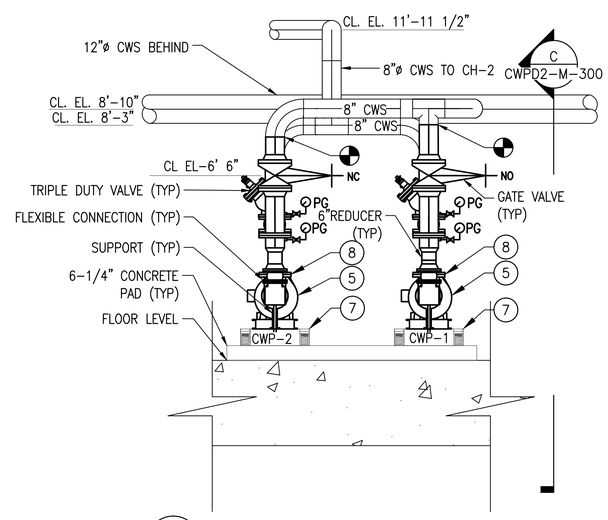

D SECTION - MECHANICAL
CWPD2-M-300
SCALE: 3/8" = 1'-0"

GENERAL NOTES:

A. CONTRACTOR SHALL FIELD VERIFY EXACT LOCATION AND QUANTITIES OF EQUIPMENT, PIPING, VALVES, DUCTWORK, ELECTRICAL AND CONTROL WIRING PRIOR TO DEMOLITION. ITEMS SHOWN ON THIS PLAN ARE APPROXIMATE.

B. REFER TO LEGEND SHEET FOR GENERAL ABBREVIATIONS AND SYMBOLS

C. REFER TO CHILLER PIPING SCHEMATIC FOR ALL VALVES. ALL VALVES MAY NOT BE SHOWN ON THIS DRAWING FOR CLARITY.

D. INSTALL ALL EQUIPMENT AND COMPONENTS PER MANUFACTURER'S RECOMMENDATION. PROVIDE ACCESS CLEARANCE AT ALL LOCATIONS OF VALVES, STRAINERS, INSTRUMENTATION, AND EQUIPMENT AS REQUIRED BY THE MANUFACTURER FOR EASE OF MAINTENANCE.

KEYNOTE:

REFER TO CWPD2-M-102 FOR KEYNOTES USED ON THIS DRAWING.

GFP A Gannett Fleming/Parsons JOINT VENTURE

DISTRICT OF COLUMBIA RICHARD A. SILVA 03/29/2018 No. 096926 MECHANICAL PROFESSIONAL ENGINEER

DESIGNED	C. LOOSE	07/26/17 DATE
DRAWN	C. LOOSE	07/26/17 DATE
CHECKED	R. SILVA	DATE

REFERENCE DRAWINGS

NUMBER	TITLE

REVISIONS

DATE	NUM	DESCRIPTION
03/30/2018	0	FINAL CONTRACT DRAWINGS

WASHINGTON METROPOLITAN AREA TRANSIT AUTHORITY

DEPARTMENT OF DESIGN AND CONSTRUCTION SERVICES
OFFICE OF INFRASTRUCTURE RENEWAL PROGRAM GROUP

APPROVED Mark H. Magnussen 03/2018
MARK MAGNUSSEN DATE
MANAGER, ENV. PLANNING AND COMP

APPROVED 03/2018
GRAHAM SPILLER DATE
GFP DEPUTY PROGRAM MANAGER

REPLACEMENT OF CHILLERS
AND COOLING TOWER ACCESSORIES AT EIGHT METRO-RAIL STATIONS
CWPD2 - FEDERAL CENTER SW (D04)
MECHANICAL SECTION

M NO.	CONTRACT NO.	SCALE	DRAWING NO.	SHEET NO.
M1304	FQ-18102	3/8" = 1'-0"	CWPD2-M-300	79 of 173

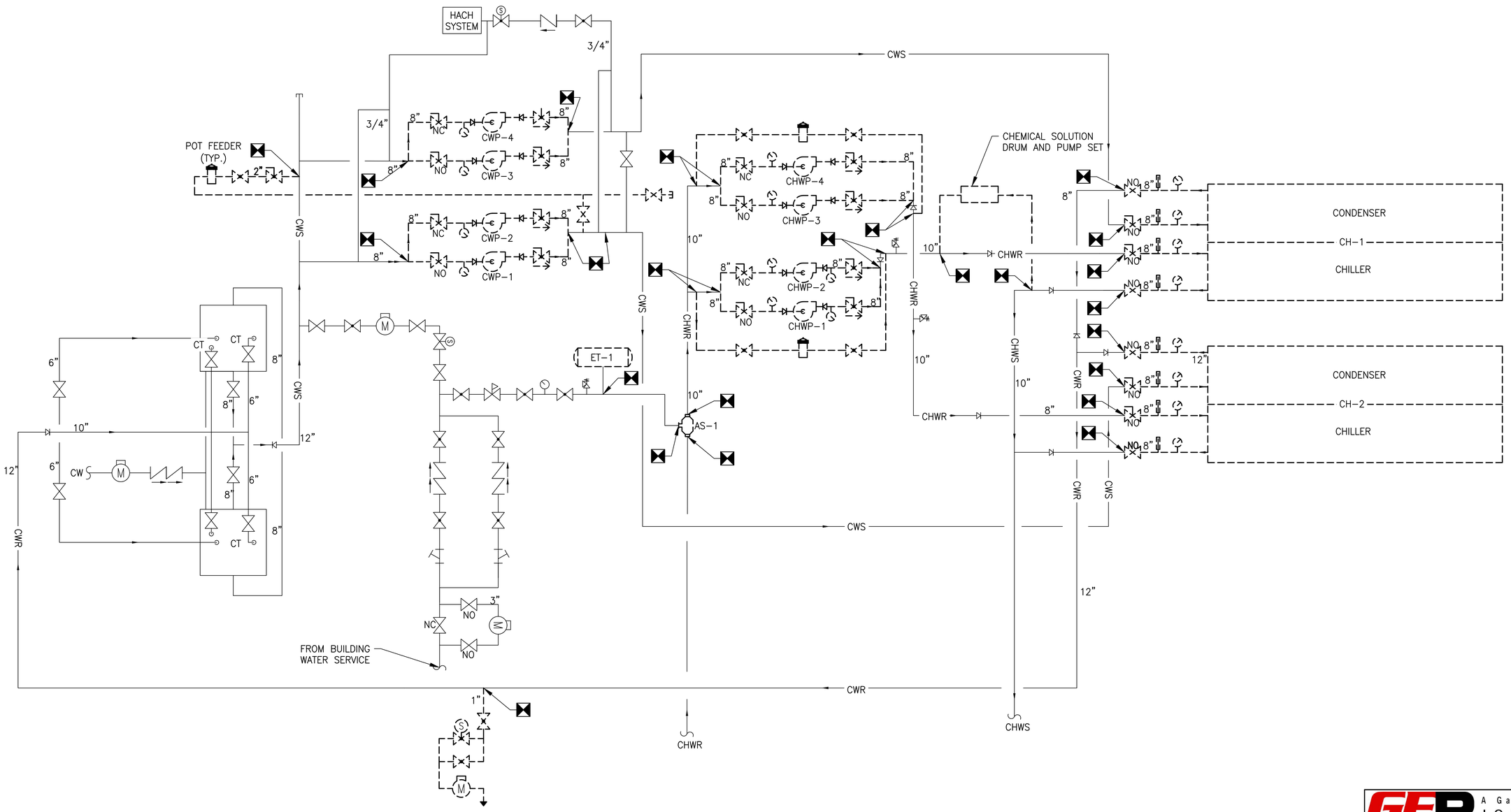

1 MECHANICAL FLOW DIAGRAM - DEMOLITION

CWPD2-M-500

SCALE: NOT TO SCALE

GFP A Gannett Fleming/Parsons JOINT VENTURE

DISTRICT OF COLUMBIA RICHARD A. SILVA 03/29/2018 No. 096926 MECHANICAL PROFESSIONAL ENGINEER

DESIGNED	C. LOOSE	07/26/17 DATE
DRAWN	C. LOOSE	07/26/17 DATE
CHECKED	R. SILVA	DATE

REFERENCE DRAWINGS

NUMBER	TITLE

REVISIONS

DATE	NUM	DESCRIPTION
03/30/2018	0	FINAL CONTRACT DRAWINGS

WASHINGTON METROPOLITAN AREA TRANSIT AUTHORITY

DEPARTMENT OF DESIGN AND CONSTRUCTION SERVICES
OFFICE OF INFRASTRUCTURE RENEWAL PROGRAM GROUP

APPROVED Mark H. Magnussen 03/2018
MARK MAGNUSSEN DATE
MANAGER, ENV. PLANNING AND COMP

APPROVED 03/2018
GRAHAM SPILLER DATE
GFP DEPUTY PROGRAM MANAGER

REPLACEMENT OF CHILLERS
AND COOLING TOWER ACCESSORIES AT EIGHT METRO-RAIL STATIONS
CWPD2 - FEDERAL CENTER SW (D04)
MECHANICAL FLOW DIAGRAM - DEMOLITION

M NO.	CONTRACT NO.	SCALE	DRAWING NO.	SHEET NO.
M1304	FQ-18102	NOT TO SCALE	CWPD2-M-500	80 of 173